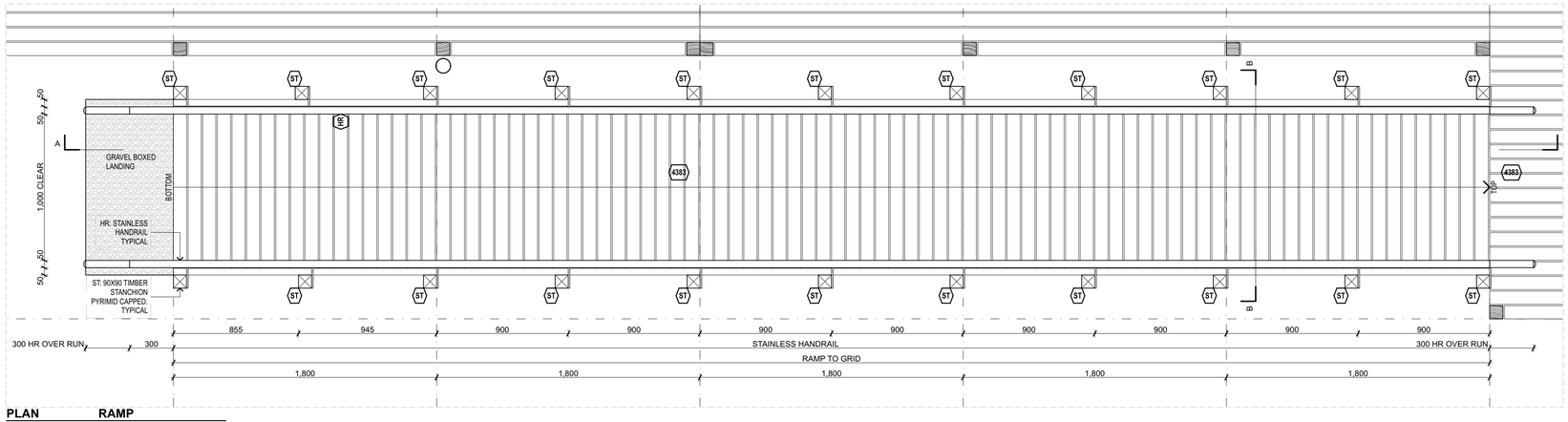

PLAN RAMP

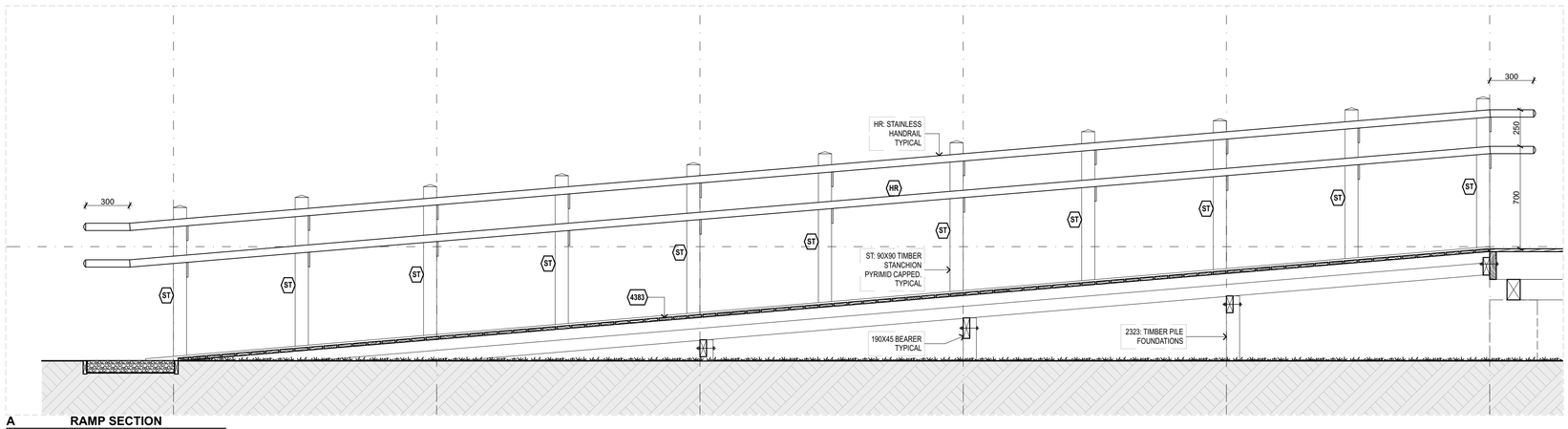

A RAMP SECTION

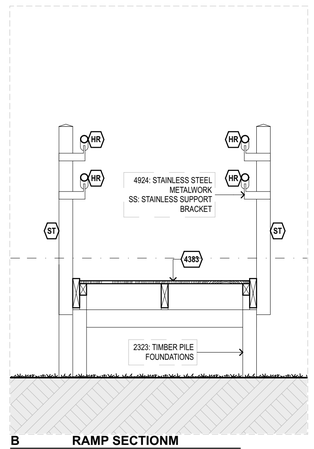

B RAMP SECTIONM

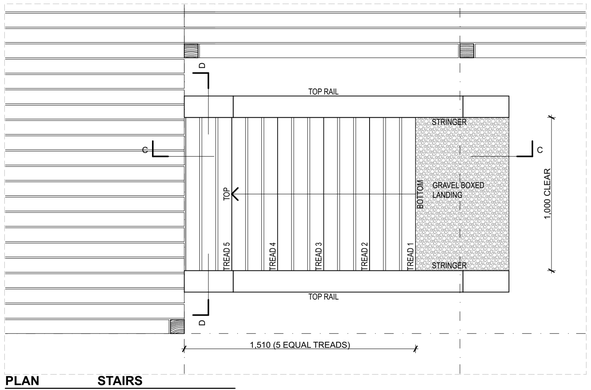

PLAN STAIRS

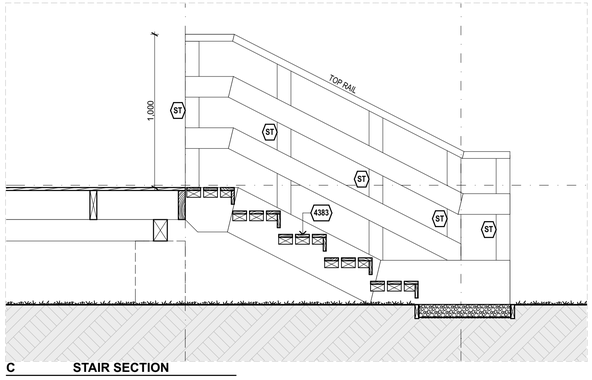

C STAIR SECTION

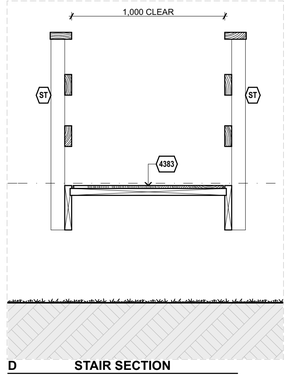

D STAIR SECTION

CIIC

Cook Islands Investment Corporation

VAT No:

P.O. Box 51, Rarotonga, Cook Islands
T: +682 29391
W: www.ciic.gov.ck

Code	Amendments	Date

Project: TEMPORARY SENIOR SCHOOL BUILDING
APII NIKAO
NIKAO

Proprietor: COOK ISLANDS INVESTMENT CORPORATION

Description: VERTICAL CIRCULATION

Status: FOR INFORMATION ONLY

Date: 17/08/2016 Scale: 1:20 @ A1

Project No. Drawing No. A08 Rev.

File: Users/mcarano/Documents/Mini Workshop/PROJECTS/ACTIVE/1021 - PREPAR CLASSROOMS/DRAWINGS/CAD/PLN/102

Note: All dimensions noted are in millimetres. Verify all dimensions and construction grids on site prior to commencement of any work. Do not scale off drawings. Copyright remains the property of CIIC.